900-LFC Compact Low-Frequency Control Element

thinking sound Meyer® Sound

Keep these important operating instructions.
Check www.meyersound.com for updates.

900-LFC Operating Instructions, PN 05.246.005.01 B3

CONTENTS

CHAPTER 1: INTRODUCTION

HOW TO USE THIS MANUAL

Make sure to read these instructions in their entirety before configuring a Meyer Sound loudspeaker system. In particular, pay close attention to material related to safety issues.

As you read these instructions, you will encounter the following icons for notes, tips, and cautions:

NOTE: A note identifies an important or useful piece of information relating to the topic under discussion.

TIP: A tip offers a helpful tip relevant to the topic at hand.

CAUTION: A caution gives notice that an action may have serious consequences and could cause harm to equipment or personnel, or could cause delays or other problems.

Information and specifications are subject to change. Updates and supplementary information are available at www.meyersound.com.

Meyer Sound Technical Support is available at:

- **Tel:** +1 510 486.1166
- **Tel:** +1 510 486.0657 (after hours support)
- **Web:** www.meyersound.com/support
- **Email:** techsupport@meyersound.com

900-LFC COMPACT LOW-FREQUENCY CONTROL ELEMENT

Meyer Sound's 900-LFC compact low-frequency control element reproduces low frequencies at high, continuous output levels with extremely low distortion. The 900-LFC offers the same sonic linearity as Meyer Sound's 1100-LFC low-frequency control element in a smaller, lighter cabinet, making it ideal for building scalable systems to suit touring applications or fixed installations of any size.

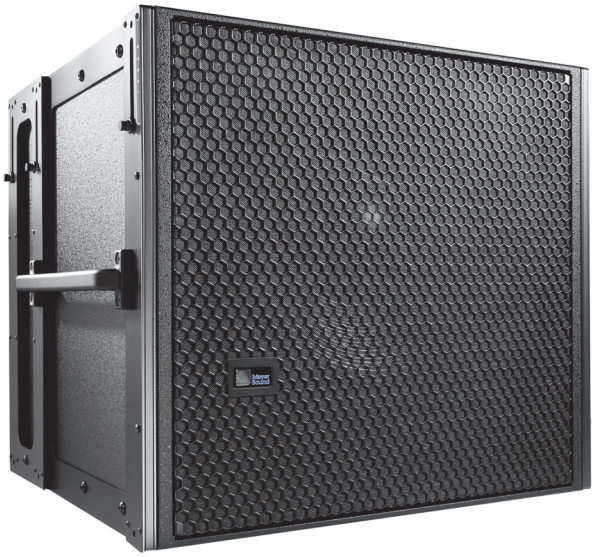

900-LFC Compact Low-Frequency Control Element

A newly-designed class D amplifier affords unprecedented efficiency to the 900-LFC, significantly lowering distortion while reducing power consumption and operating temperature. The onboard amplifier and control circuitry are contained in a single, field-replaceable module.

In addition to pairing with LEOPARD™ systems, the 900-LFC integrates easily with other Meyer Sound loudspeaker systems, including LEO-M™, LYON™, and ULTRA Series loudspeakers.

LEOPARD and 900-LFC can be driven by Meyer Sound's Galileo Callisto™ 616 array processor, which provides matrix routing, alignment, and processing for array components. To guarantee optimum performance, systems with the 900-LFC should be designed with Meyer Sound's MAPP™ software. LEOPARD and 900-LFC loudspeakers work with Meyer Sound's RMS™ remote monitoring system, which provides comprehensive monitoring of system parameters from a Mac® or Windows®-based computer.

MCF-900 Caster Frame with 900-LFC Stack

The 900-LFC is available with or without Meyer Sound's QuickFly® rigging. When equipped with the optional MRK-900 rigging kit, the 900-LFC's captive GuideALinks™ allow it to be flown from the MG-LEOPARD/900 multipurpose grid in LEOPARD arrays without a transition frame. 900-LFCs can also be flown separately as a subwoofer array with variable splay angles from 0 to 5 degrees. The MG-LEOPARD/900 grid can also be used for groundstacks with uptilt or downtilt.

Both versions of the 900-LFC can be transported in stacks with the optional MCF-900 caster frame.

NATIVE MODE

LEOPARD and 900-LFC loudspeakers are optimized for use in certain flown and groundstacked configurations without any array compensation or other signal processing. This capability, called *Native mode*, allows LEOPARD/900-LFC systems to be deployed quickly with excellent results, without equalization, tuning, or use of presets.

To use LEOPARD and 900-LFC loudspeakers in Native mode, send an identical, unmodified signal to each element in the array. The simplest way to accomplish this is by looping the same, unprocessed source signal through all array elements.

The following coplanar configurations can be used in Native mode (without any signal processing):

- Flown mixed arrays of LEOPARDs and 900-LFCs (Figure 1)
- Flown separate arrays of LEOPARDs and 900-LFCs (Figure 2)
- Mixed groundstacks of LEOPARDs and 900-LFCs (Figure 3)

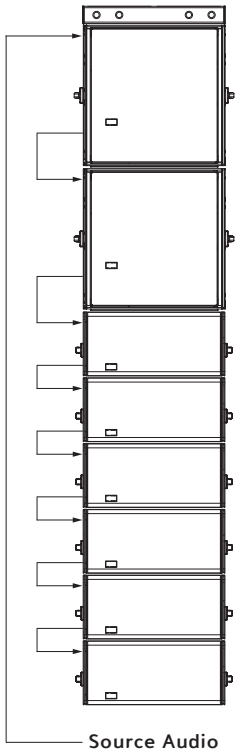

Figure 1: Flown Mixed Array

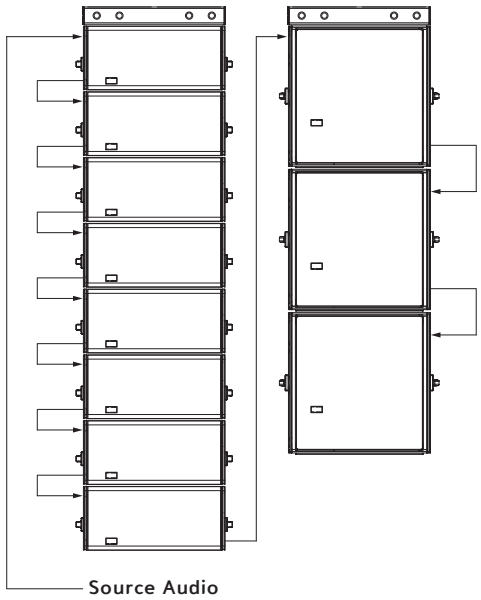

Figure 2: Flown Separate Arrays

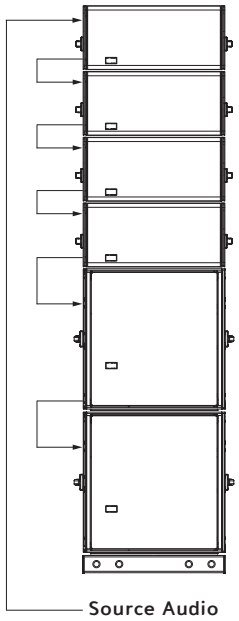

Figure 3: Mixed Groundstack

NOTE: Native mode should not be used with more advanced configurations, such as those where 900-LFCs and LEOPARDs are not coplanar, or those requiring delay offsets to align subsystems or to create directional low-frequency control. These systems require additional processing.

NOTE: For Native mode to work properly, the source signal must be correctly configured with the appropriate gain structure.

CAUTION: Make sure that all cabling for looped loudspeakers is wired correctly (Pin 1 to Pin 1, Pin 2 to Pin 2, and so forth) to prevent the polarity from being reversed. If one or more loudspeakers in a system have reversed polarity, frequency response and coverage will be significantly degraded.

CHAPTER 2: POWER REQUIREMENTS

The 900-LFC combines advanced loudspeaker technology with equally advanced power capabilities. Understanding power distribution, voltage and current requirements, and electrical safety guidelines is critical to the safe operation of the 900-LFC.

AC POWER DISTRIBUTION

All components in an audio system (self-powered loudspeakers, mixing consoles, and processors) must be properly connected to an AC power distribution system, ensuring that AC line polarity is preserved and that all grounding points are connected to a single node or common point using the same cable gauge (or larger) as the neutral and line cables.

CAUTION: Make sure the voltage received by the 900-LFC remains within its 90–264 V AC operating range. In addition, the ground line must always be used for safety reasons and the line-to-ground voltage should never exceed 250 V AC (typically 120 V AC from line to ground).

CAUTION: Before applying AC power to any Meyer Sound self-powered loudspeaker, make sure that the voltage potential difference between the neutral and earth-ground lines is less than 5 V AC when using single-phase AC wiring.

NOTE: Improper grounding of connections between loudspeakers and the rest of the audio system may produce noise or hum, or cause serious damage to the input and output stages of the system's electronic components.

120 V AC, 3-Phase Wye System (Single Line)

Line-Neutral-Earth/Ground

Figure 4 illustrates a basic 120 V AC, 3-phase Wye distribution system with the loudspeaker load distributed across all three phases, with each loudspeaker connected to a single line and common neutral and earth/ground lines. This system delivers 120 V AC to each loudspeaker.

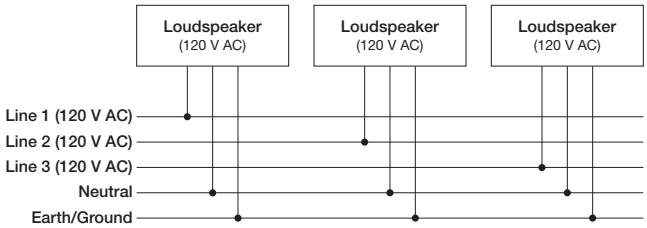

Figure 4: 120 V AC, 3-Phase Wye System (Single Line to Loudspeakers)

120 V AC, 3-Phase Wye System (Two Lines)

Line-Line-Earth/Ground

Figure 5 illustrates a 120 V AC, 3-phase Wye distribution system with each loudspeaker connected to two lines and a common earth/ground line. This configuration is possible because the 900-LFC tolerates elevated voltages from the ground line and does not require a neutral line. This system delivers 208 V AC to each loudspeaker.

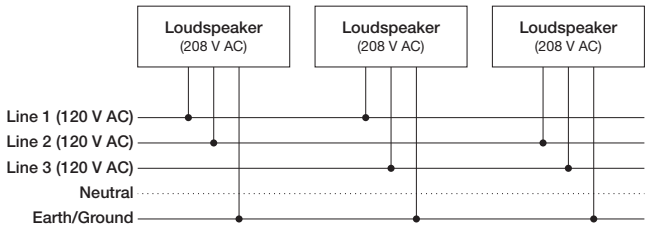

Figure 5: 120 V AC, 3-Phase Wye System (Two Lines to Loudspeakers)

TIP: The 120 V AC, 3-phase Wye system with two lines is recommended because it allows loudspeakers to draw less current than with single-line systems, thereby reducing voltage drop due to cable resistance.

220 V AC, 3-Phase Wye System (Single Line)

Line-Neutral-Earth/Ground

Figure 6 illustrates a basic 220 V AC, 3-phase Wye distribution system with the loudspeaker load distributed across all three phases, with each loudspeaker connected to a single line and common neutral and earth/ground lines. This system delivers 220 V AC to each loudspeaker.

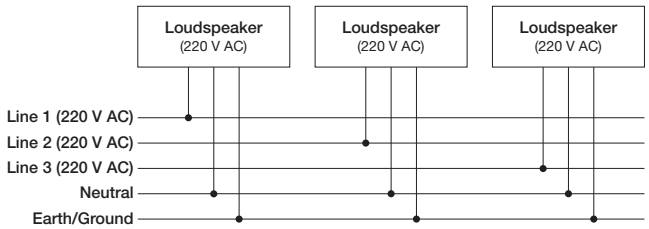

Figure 6: 220 V AC, 3-Phase Wye System (Single Line to Loudspeakers)

CAUTION: For 220 V AC, 3-phase Wye systems, never connect two lines to the AC input of the 900-LFC, as the resulting voltage would be higher than the allowable upper voltage range (275 V AC) and would damage the loudspeaker.

AC CONNECTORS

The 900-LFC user panel includes two powerCON 20 connectors, one for AC Input (blue) and one for AC Loop Output (gray).

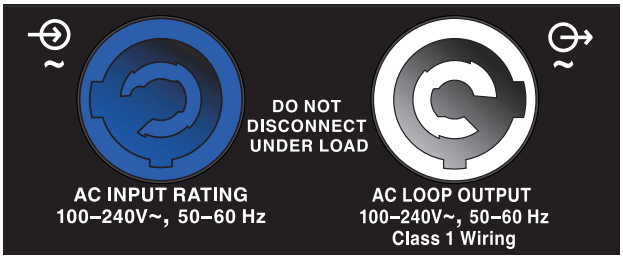

AC Input (Left) and AC Loop Output (Right) Connectors

AC Input (Blue)

The blue AC Input connector supplies power to the 900-LFC. The 3-conductor powerCON 20 is rated at 20 A and uses a locking connector that prevents accidental disconnections. A 10-foot AC power cable, rated at 15 A, is included with each loudspeaker. If you replace the included AC power cable, make sure to use a cable with the appropriate power plug (on the other end) for the area in which you will operate the unit. The 900-LFC requires a grounded outlet. To operate safely and effectively, it is extremely important that the entire system be properly grounded.

The AC Input connector also supplies power to any additional loudspeakers connected to the loudspeaker's gray Loop Output connector.

CAUTION: When looping AC power for loudspeakers, do not exceed the current capability of the AC Input connector (20 A) or the included AC power cable (15 A). Consider the total current draw for all loudspeakers on the circuit, including the first loudspeaker (see Table 1 on page 10).

AC Loop Output (Gray)

The gray AC Loop Output connector allows multiple 900-LFCs to be looped and powered from a single power source. The 3-conductor powerCON 20 is rated at 20 A and uses a locking connector that prevents accidental disconnections. For applications that require multiple 900-LFCs, connect the AC Loop Output of the first loudspeaker to the AC Input of the second loudspeaker, and so forth.

The maximum number of loudspeakers that can be looped from the AC Loop Output connector is determined by the voltage of the power source, the current draw of the looped loudspeakers, the circuit breaker rating, and the rating of the AC power cable connected to the first 900-LFC loudspeaker.

Table 1: Maximum 900-LFCs that Can Be Looped with AC Power

Circuit Breaker/ Connector Rating	115 V AC	230 V AC	100 V AC
15 A / 16 A	2 looped (3 total)	5 looped (6 total)	1 looped (2 total)
20 A	3 looped (4 total)	7 looped (8 total)	2 looped (3 total)

NOTE: Current draw for the 900-LFC is dynamic and fluctuates as operating levels change. The indicated number of loudspeakers that can be looped assumes that operating levels are normal and not such that loudspeakers are constantly limiting.

The 900-LFC ships with a gray powerCON 20 cable mount connector, rated at 20 A, for assembling AC looping cables. Assembled AC looping cables are also available from Meyer Sound.

CAUTION: When looping AC power for loudspeakers, do not exceed the current capability of the AC Input connector (20 A) or the included AC power cable (15 A). Consider the total current draw for all loudspeakers on the circuit, including the first loudspeaker (see Table 1).

WIRING AC POWER CABLES

The 900-LFC ships with a gray powerCON 20 cable mount connector, rated at 20 A, for assembling AC looping cables. The pins on the powerCON 20 cable mount connector are labeled as follows:

- L (Line)
- N (Neutral)
- PE (Protective Earth or Ground)

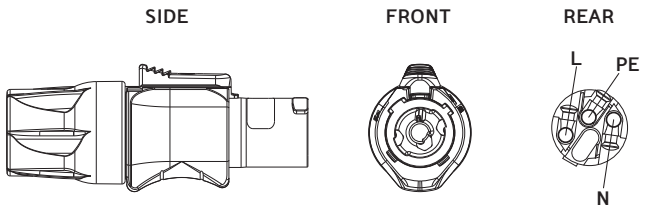

powerCON 20 Cable Mount Connector

How AC power cables are wired is determined by the type of AC power distribution system used (see “AC Power Distribution” on page 9). When wiring AC power cables for single-line systems, use one of the following wiring schemes:

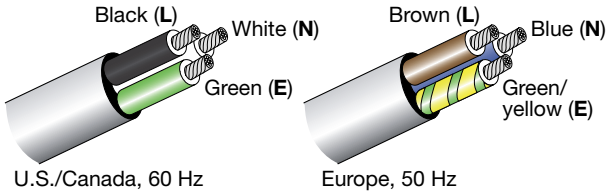

AC Wiring Scheme

Wire Color		Attach to the Following Terminal
U.S. / Canada 60 Hz	European 50 Hz	
Black	Brown	Hot or live (L)
White	Blue	Neutral (N)
Green	Green and Yellow	Protective earth / ground (E or PE)

⚠ **CAUTION:** When wiring AC power cables and distribution systems, it is important to preserve AC line polarity and connect the earth ground on both ends of the cable. The 900-LFC requires a grounded connection. Always use a grounded outlet and plug. It is extremely important that the system be properly grounded to operate safely and properly. Do not ground-lift the AC cable.

900-LFC VOLTAGE REQUIREMENTS

The 900-LFC operates as intended when receiving AC voltage within the following range:

- 90–264 V AC, 50–60 Hz

If the voltage drops below 90 V, the loudspeaker uses stored power to continue operating temporarily; the loudspeaker powers off if the voltage does not return to its operating range.

If the voltage rises above 275 V, the power supply could become damaged.

⚠ **CAUTION:** The power source for the 900-LFC should always operate within the required operating range, at least a few volts from the upper and lower ranges. This ensures that AC voltage variations from the service entry — or peak voltage drops due to cable runs — will not cause the loudspeaker’s amplifier to cycle on and off or cause damage to the power supply.

900-LFC CURRENT REQUIREMENTS

Current draw for loudspeakers is dynamic and fluctuates as operating levels change. Since different cables and circuit breakers heat up at varying rates, it is important to understand the following types of current ratings and how they affect circuit breaker and cable specifications.

- **Idle Current** — The maximum rms current during idle periods.
- **Maximum Long-Term Continuous Current** — The maximum rms current during a period of at least 10 seconds. The maximum long-term continuous current is used to calculate temperature increases for cables, to ensure that cable sizes and gauges conform to electrical code standards. The current rating is also used as a rating for slow-reacting thermal breakers, which are recommended for loudspeaker power distribution. In addition, the maximum long-term continuous current can be used to calculate the AC looping capability for 900-LFC loudspeakers.
- **Burst Current** — The maximum rms current during a period of around 1 second. The burst current is used as a rating for magnetic breakers. It is also used for calculating the peak voltage drop in long AC cable runs according to the following formula:

  V pk (drop) = I pk x R (cable total)
- **Maximum Instantaneous Peak Current** — A rating for fast-reacting magnetic breakers.

You can the following table as a guide for selecting cable gauges and circuit breaker ratings for the system's operating voltage.

900-LFC Current Draw

Current Draw	115 V AC	230 V AC	100 V AC
Idle	0.60 A rms	0.49 A rms	0.63 A rms
Maximum Long-Term Continuous	4.9 A rms	2.5 A rms	5.2 A rms
Burst	8.8 A rms	4.7 A rms	11.0 A rms
Maximum Instantaneous Peak	18.2 A peak	9.2 A peak	20.6 A peak

The minimum electrical service amperage required by a loudspeaker system is the sum of the maximum long-term continuous current for all loudspeakers. An additional 30 percent above the minimum amperage is recommended to prevent peak voltage drops at the service entry.

NOTE: For best performance, the AC cable voltage drop should not exceed 10 V (10 percent at 115 V and 5 percent at 230 V). Make sure that even with AC voltage drops that the voltage always remains within the loudspeaker's operating range.

INTELLIGENT AC POWER SUPPLY

The 900-LFC's Intelligent AC™ power supply automatically selects the correct operating voltage, allowing the loudspeaker to be used internationally without manually setting voltage switches; eliminates high inrush currents with soft-start power up; suppresses high-voltage transients up to several kilovolts; filters common mode and differential mode radio frequencies (EMI); and sustains operation temporarily during low-voltage periods.

Powering on the 900-LFC

When powering on the 900-LFC, the following startup events take place over several seconds.

1. Audio output is muted.
2. Voltage is detected and the power supply mode is automatically adjusted as necessary.
3. The power supply ramps up.
4. On the user panel, the Active/Status LED flashes multiple colors successively.
5. The Active/Status LED turns solid green, indicating the loudspeaker is ready to output audio.

CAUTION: If the Active/Status LED does not turn solid green, or the 900-LFC does not output audio after 10 seconds, remove AC power immediately and verify that the voltage is within the required range. If the problem persists, contact Meyer Sound Technical Support.

ELECTRICAL SAFETY GUIDELINES

Make sure to observe the following important electrical and safety guidelines.

- The powerCON 20 connector should not be engaged or disengaged when under load or live.
- The 900-LFC requires a grounded outlet. Always use a grounded outlet and plug.

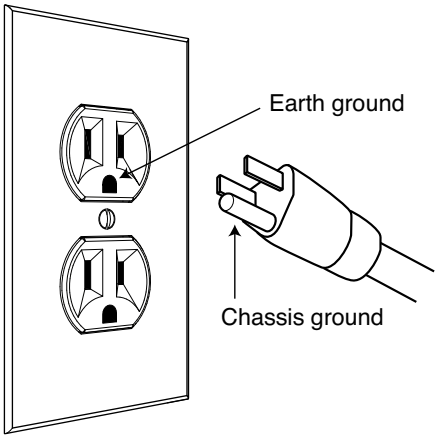

- Do not use a ground-lifting adapter or cut the AC cable ground pin.

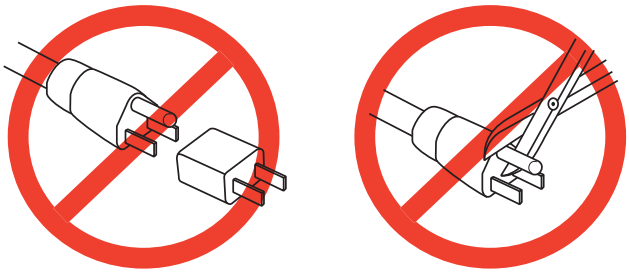

- Do not exceed the current capability of the 20 A AC Input connector for the loudspeaker. When looping loudspeakers, consider the total current draw for all loudspeakers on the circuit, including the first loudspeaker.

- Make sure the AC power cable for the loudspeaker has the appropriate power plug (on the other end) for the area in which you will operate the loudspeaker. In addition, the AC power cable must be rated for the total current draw of all loudspeakers looped from the power source.
- Do not operate the unit if the power cable is frayed or broken.
- Keep all liquids away from 900-LFC loudspeakers to avoid hazards from electrical shock.
- Use the cable rings (see “Cable Rings” on page 16) on the rear of the the 900-LFC cabinet to reduce strain on the AC power cable (and audio cables). Do not use the cable rings for any other purpose.

CHAPTER 3: AMPLIFICATION AND AUDIO

The 900-LFC's drivers are powered by a proprietary 2-channel, open-loop, class D amplifier. The audio signal is processed with correction filters for flat phase and frequency responses and driver protection circuitry. Each channel has peak and rms limiters that prevent driver over-excursion and regulate voice coil temperatures.

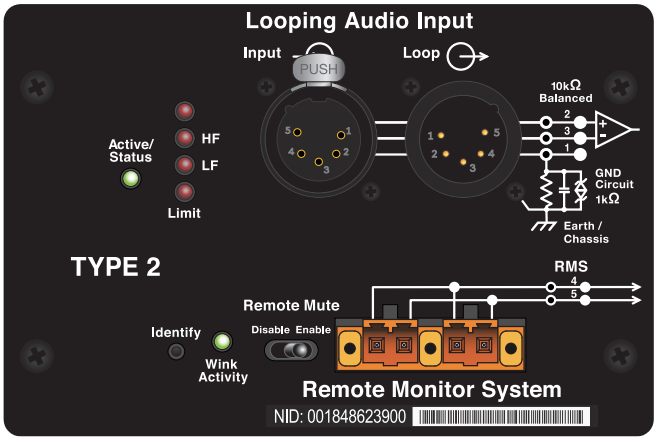

900-LFC User Panel

The 900-LFC user panel includes Input and Loop output connectors for audio, Limit and Active LEDs, and RMS connectors and controls (see Chapter 5, "RMS Remote Monitoring System").

AUDIO CONNECTORS

The 900-LFC is available with XLR 3-pin or 5-pin connectors for audio Input and audio Loop output. XLR 5-pin connectors accommodate both balanced audio and RMS signals.

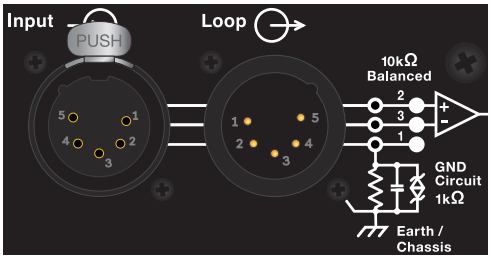

XLR 5-Pin Audio Connectors, Input and Loop Output

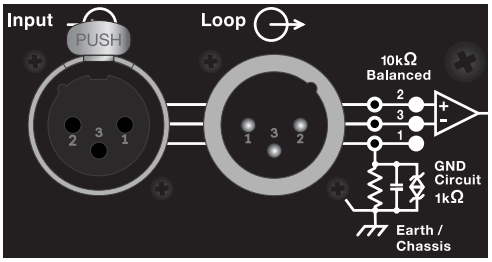

XLR 3-Pin Audio Connectors, Input and Loop Output

Audio Input (XLR 3-Pin or 5-Pin Female)

The XLR 3-pin or 5-pin female Input connector accepts balanced audio signals with an input impedance of 10 kOhm. The connector uses the following wiring scheme:

- **Pin 1** — 1 kOhm to chassis and earth ground (ESD clamped)
- **Pin 2** — Signal (+)
- **Pin 3** — Signal (–)
- **Pin 4** — RMS (polarity insensitive)
- **Pin 5** — RMS (polarity insensitive)
- **Case** — Earth (AC) ground and chassis

NOTE: Pins 4 and 5 (RMS) are included only with XLR 5-pin connectors.

Pins 2 and 3 carry the input as a differential signal. Pin 1 is connected to earth through a 1 kOhm, 1000 pF, 15 V clamped network. This circuitry provides virtual ground lift for audio frequencies while allowing unwanted signals to bleed to ground. Make sure to use balanced XLR audio cables with pins 1–3 connected on both ends. Telescopic grounding is not recommended and shorting an input connector pin to the case may cause a ground loop, resulting in hum.

TIP: If unwanted noise or hiss is produced by the loudspeaker, disconnect its input cable. If the noise stops, there is most likely nothing wrong with the loudspeaker. To locate the source of the noise, check the audio cable, source audio, and AC power.

Audio Loop Output (XLR 3-Pin or 5-Pin Male)

The XLR 3-pin or 5-pin male Loop output connector allows multiple loudspeakers to be looped from a single audio source. The Loop output connector uses the same wiring scheme as the Input connector (see “Audio Input (XLR 3-Pin or 5-Pin Female)” on page 15). For applications that require multiple 900-LFCs, connect the Loop output of the first loudspeaker to the Input of the second loudspeaker, and so forth.

NOTE: The Loop output connector is wired in parallel to the Input connector and transmits the unbuffered source signal even when the loudspeaker is powered off.

Calculating Load Impedance for Looped Audio Signals

To avoid distortion when looping multiple loudspeakers, make sure the source device can drive the total load impedance of the looped loudspeakers. In addition, the source device must be capable of delivering approximately 20 dBV (10 V rms into 600 ohms) to yield the maximum SPL over the operating bandwidth of the loudspeakers.

To calculate the load impedance for the looped loudspeakers, divide 10 kOhms (the input impedance for a single loudspeaker) by the number of looped loudspeakers. For example, the load impedance for 10 900-LFCs is 1000 ohms (10 kOhms / 10). To drive this number of looped loudspeakers, the source device should have an output impedance of 100 ohms or less. This same rule applies when looping 900-LFCs with other Meyer Sound self-powered loudspeakers.

NOTE: Most source devices are capable of driving loads no smaller than 10 times their output impedance.

TIP: Audio outputs from Meyer Sound’s Galileo 616 and Galileo Callisto 616 are rated at 50 ohms, which means that their outputs can singly drive up to 20 Meyer Sound (10 kOhm) loudspeakers without distortion.

CAUTION: Make sure that all cabling for looped loudspeakers is wired correctly (Pin 1 to Pin 1, Pin 2 to Pin 2, and so forth) to prevent the polarity from being reversed. If one or more loudspeakers in a system have reversed polarity, frequency response and coverage will be significantly degraded.

CABLE RINGS

Two cable rings are provided on the rear of the 900-LFC cabinet. Power and audio cables should be tied off to the rings to reduce strain on the cables and prevent damage to them during installation. The cable rings should not be used for any other purpose.

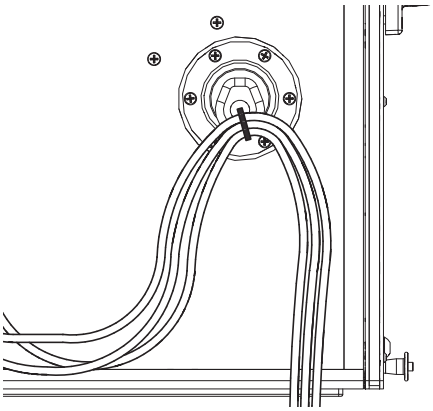

Cables Tied Off to Cable Ring

CAUTION: 900-LFC cable rings should only be used to reduce strain on cables. The cable rings should not be used for any other purpose.

TRUPOWER LIMITING

The 900-LFC employs Meyer Sound’s advanced TruPower® limiting. Conventional limiters assume a constant loudspeaker impedance and set the limiting threshold by measuring voltage alone. This method is inaccurate because loudspeaker impedances change as frequency content in

the source material changes, and as thermal values for the loudspeaker's voice coil and magnet vary. Consequently, conventional limiters often begin limiting prematurely, which reduces system headroom and dynamic range.

In contrast, TruPower limiting anticipates varying loudspeaker impedances by measuring both current and voltage to compute the actual power dissipation in the voice coil. This improves performance, both before and during limiting, by allowing the driver to produce the maximum SPL across its entire frequency range, while also retaining signal peaks. TruPower limiting also eliminates power compression at high levels over lengthy periods, which helps regulate voice coil temperatures, thereby extending the life of the driver.

LF Limit LED

The low-frequency driver for the 900-LFC is powered by separate amplifier channels, one for each voice coil, that are routed to a single limiter. When a safe power level is exceeded in either channel, limiting is engaged for both channels and the LF Limit LED lights on the user panel (the HF Limit LED is disabled for the 900-LFC).

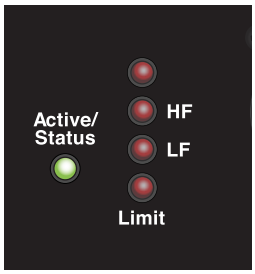

900-LFC Limit LEDs (HF LED Disabled)

When engaged, the limiter not only protects the drivers but also prevents signal peaks from causing excessive distortion in the amplifier channels, thereby preserving headroom and maintaining smooth frequency response at high levels. When levels return to normal, below the limiter threshold, limiting ceases.

The 900-LFC performs within its acoustical specifications at normal temperatures when the LF Limit LED is unlit, or when the LED is lit for 2 seconds or less and then turns off for at least 1 second. If the LED remains lit for longer than 3 seconds, the loudspeaker enters hard limiting where:

- Increases to the input level have no effect
- Distortion increases due to clipping
- Drivers are subjected to excessive heat and excursion, thereby compromising their lifespan

⚠ **CAUTION:** The Limit LEDs indicate when a safe, optimum level is exceeded. If a 900-LFC loudspeaker system begins to limit before reaching the desired SPL, consider adding more units to the system.

AMPLIFIER COOLING SYSTEM

The 900-LFC employs natural convection in its cooling system. The amplifier's heat sink provides natural convection cooling from the air flowing near its fins. When exposed to high ambient temperatures or when driven continuously at high output levels, a variable-speed fan circulates air internally to ensure that the 900-LFC remains operational.

⚠ **CAUTION:** To keep the 900-LFC from overheating, allow at least 6 inches behind the loudspeaker for proper ventilation.

⚠ **CAUTION:** The 900-LFC's heat sink can reach temperatures up to 80° C (176° F) during extreme operation. Wait 15 minutes for the unit to cool before touching.

ACTIVE/STATUS LED

During normal operation, when the 900-LFC is powered on, the Active/Status LED is solid green. If the loudspeaker encounters a hardware fault, or the unit begins to overheat, the LED flashes red. In some instances, the loudspeaker will continue to output audio while the LED flashes red, though with a reduction in the limiter thresholds (and gain) to protect the loudspeaker.

If a loudspeaker is overheating (for RMS-equipped loudspeakers, you can verify this in Compass RMS), a reduction in SPL may be necessary. If, after a reduction in SPL and an appropriate cooling period, the Active/Status LED continues to flash red (does not return to solid green), contact Meyer Sound Technical Support.

If the Active/Status LED flashes red and the loudspeaker does not output audio, contact Meyer Sound Technical Support immediately.

⚠ **CAUTION:** If a 900-LFC loudspeaker system consistently overheats before reaching the desired SPL, consider adding more units to the system.

NOTE: During startup, the Active/Status LED flashes multiple colors successively. For more information on the power on sequence, see “Intelligent AC Power Supply” on page 12.

TIP: When the 900-LFC is connected to an RMS network, the Compass RMS software provides additional feedback on the loudspeaker’s hardware status and operating temperature. For more information, see Chapter 5, “RMS Remote Monitoring System.”

CHAPTER 4: QUICKFLY RIGGING

IMPORTANT SAFETY CONSIDERATIONS!

When installing Meyer Sound loudspeakers and subwoofers, the following precautions should always be observed:

- All Meyer Sound products must be used in accordance with local, state, federal, and industry regulations. It is the owner's and user's responsibility to evaluate the reliability of any rigging method for their application. Rigging should only be carried out by experienced professionals.
- Use mounting and rigging hardware that has been rated to meet or exceed the weight being hung.
- Make sure to attach mounting hardware to the building's structural components (roof truss), and not just to the wall surface.
- Make sure bolts and eyebolts are tightened securely. Meyer Sound recommends using Loctite® on all threaded fasteners.
- Inspect mounting and rigging hardware regularly. Immediately replace any worn or damaged components.

900-LFC RIGGING OPTIONS

Table 2 summarizes the available rigging options for the 900-LFC. For complete information on rigging hardware, including dimensions, weight, configuration, and load ratings, refer to the MG-LEOPARD/900 Assembly Guide (PN 05.243.080.01) available at www.meyersound.com.

Table 2: 900-LFC Rigging Options

Model	Weight	Features	Required Quick-Release Pins	Required Shackles
MRK-900 rigging kit (PN 40.246.168.01)	—	Allows the 900-LFC to be flown and groundstacked with the MG-LEOPARD/900 grid; includes six captive Guide-ALinks and eight quick-release pins	5/16 x 0.63-inch (black button), PN 134.024, qty 8 included	—
MG-LEOPARD/900 multipurpose grid (PN 40.243.080.01)	60.5 lbs (27.5 kg)	With some restrictions, flies up to 16 900-LFCs at a 5:1 safety factor, or up to 11 900-LFCs at a 7:1 safety factor; supports mixed arrays of LEOPARDs and 900-LFCs without transition hardware; accommodates a variety of pickup configurations with four corner and 13 center pickup points; includes attachment points to accommodate brackets and adapters for lasers and inclinometers; can also be used for groundstacking	5/16 x 0.875-inch (red button), PN 134.025, qty 10 included	5/8-inch or 3/4-inch
MG-LEOPARD/900 grid tilt kit (PN 40.243.163.01)	2 lbs (0.9 kg)	Includes two angle feet that attach to the rear of the MG-LEOPARD/900 grid that add from 3-8 degrees of tilt to groundstacks	5/16 x 0.875-inch (red button), PN 134.025, qty 0 included	—
MVP motor Vee plate (PN 40.215.184.01)	20 lbs (9.1 kg)	Fine tunes the horizontal aim of arrays; compatible with MTG-LEO-M, MTG-LYON, MTG-1100, and MG-LEOPARD/900 grids	—	3/4-inch or 7/8-inch
PBF-LEOPARD pull-back frame (PN 40.243.185.01)	4.9 lbs (2.2 kg)	Attaches to bottom of LEOPARD and 900-LFC arrays (to the bottom cabinet) and provides pull-back for extreme array downtilt; can also be used to add tilt to LEOPARDs groundstacked on the 900-LFC	5/16 x 0.63-inch (black button), PN 134.024, qty 2 included	1/2-inch
MCF-900 caster frame (PN 40.246.130.01)	46 lbs (20.9 kg)	Safely transports up to two 900-LFC cabinets, making it easy to assemble and disassemble arrays in blocks of two cabinets; configurable for cabinets with or without the MRK-900 rigging kit	5/16 x 0.63-inch (black button), PN 134.024, qty 0 included	—

NOTE: The MCF-900 caster frame does not include quick-release pins because it is secured with the quick-release pins included with the loudspeaker. The MG-LEOPARD/900 grid tilt kit does not include quick-release pins because the angle feet are secured with the quick-release pins included with the grid.

Rigging Example, Mixed Array with 900-LFCs and LEOPARDs

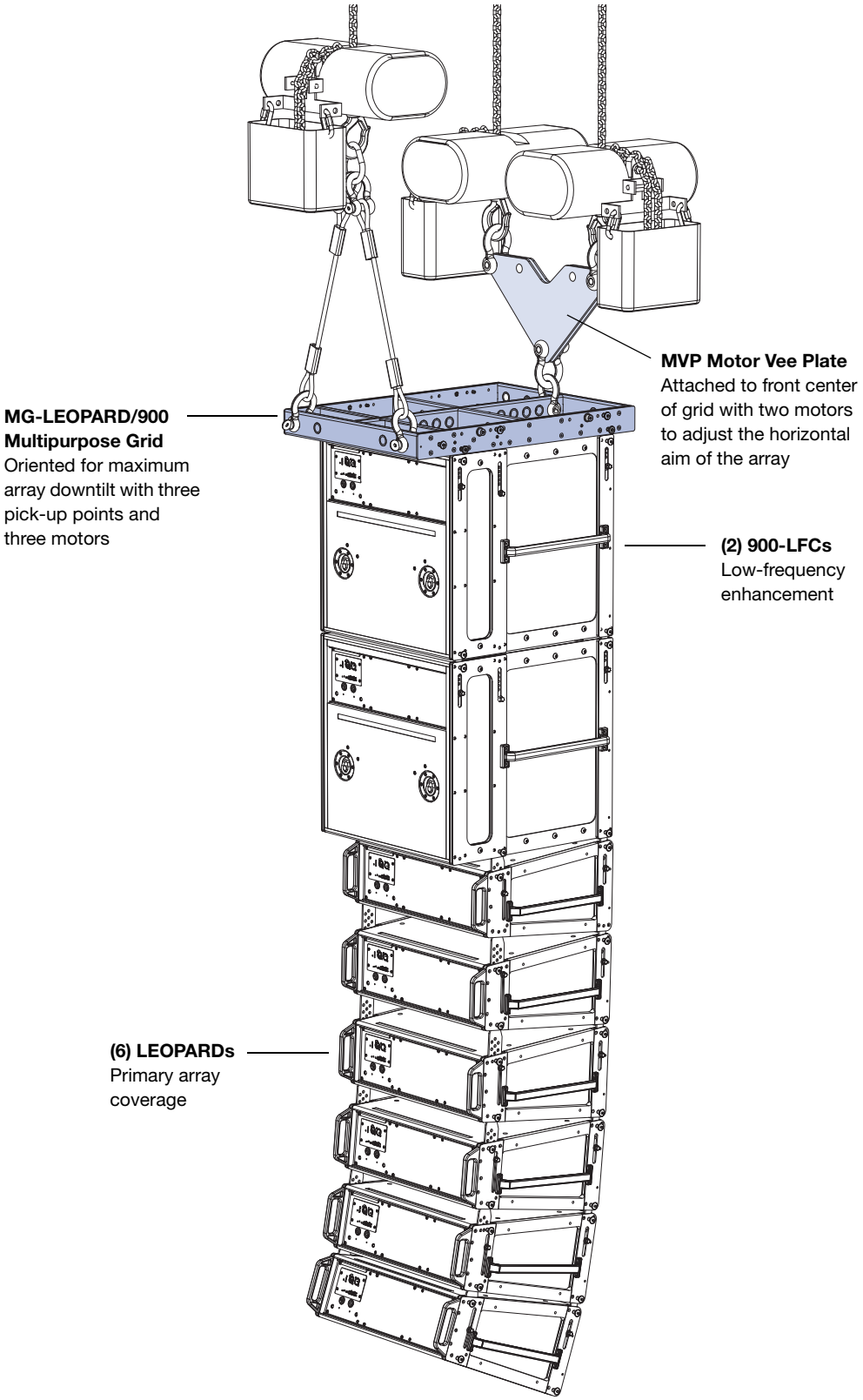

GROUNDSTACKING 900-LFC LOUDSPEAKERS

900-LFCs can be groundstacked up to three units high, with or without the MRK-900 rigging kit. Protective plastic skids are included on the bottom of the 900-LFC cabinet that align with the slots on the cabinet top. Units can be stacked normally or reversed for cardioid configurations. When groundstacking 900-LFCs, make sure the skids for each unit align with the slots in the cabinet tops. When equipped with the MRK-900 rigging kit, the 900-LFC can be groundstacked on the MG-LEOPARD/900 grid with LEOPARDs for mixed groundstacks.

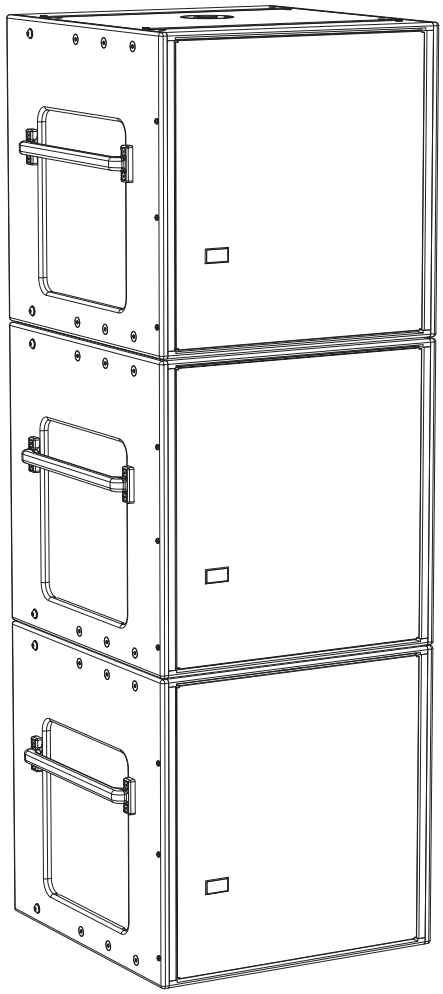

900-LFC Groundstack (Without Rigging)

CAUTION: As a safety precaution, to avoid tipping, a maximum of three cabinets is supported for groundstacked 900-LFCs.

NOTE: 900-LFCs need not be equipped with the MRK-900 rigging kit for secure groundstacking of up to three cabinets.

900-LFC CARDIOID ARRAYS

The 900-LFC can be configured in cardioid arrays to reduce output heard behind the loudspeakers. The loudspeaker's linearity ensures that cardioid patterns behave accurately even at very high levels. Cardioid arrays are achieved by placing three units coplanar to each other (in either a groundstacked or flown array) with one unit facing the opposite direction. Polarity and delay processing is applied to the rear-facing unit, which yields output that cancels output from the other loudspeakers normally present behind the units.

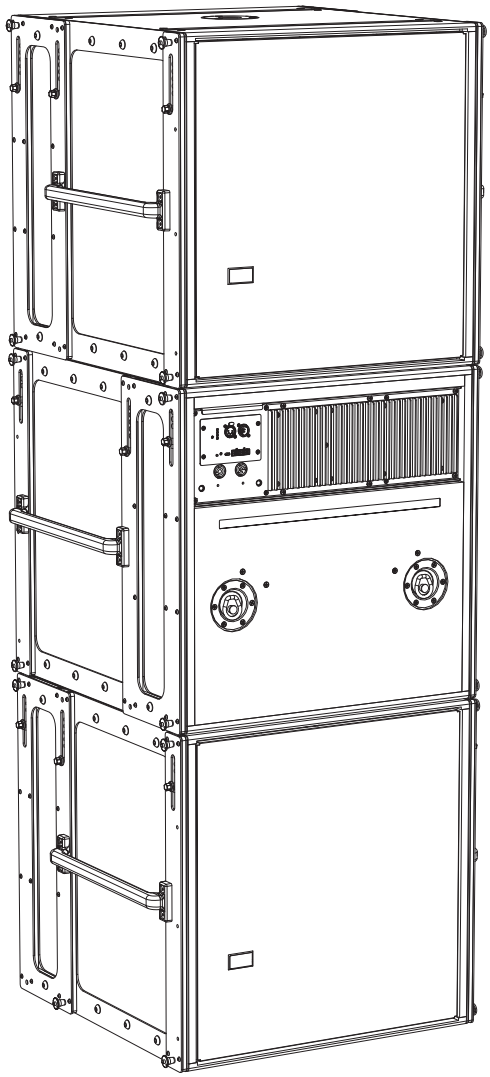

900-LFC Cardioid Groundstack (With Rigging)

NOTE: 900-LFCs need not be equipped with the MRK-900 rigging kit for groundstacked cardioid configurations of up to three cabinets.

NOTE: 900-LFC cardioid arrays can also be flown from the MG-LEOPARD/900 grid. For more information, refer to the MG-LEOPARD/900 Assembly Guide (PN 05.243.080.01) available at www.meyersound.com.

NOTE: To achieve an accurate cardioid pattern, Meyer Sound's MAPP prediction software and the Galileo® Callisto 616 array processor are required. Use MAPP to calculate the appropriate ratio of forward to rear-facing loudspeakers, as well as the Callisto 616 settings for polarity and delay. A myriad of cardioid and directional configurations are possible and can be calculated and predicted with MAPP. For more information, contact Meyer Sound Technical Support.

MRK-900 RIGGING KIT

The optional MRK-900 rigging kit allows the 900-LFC to be flown and groundstacked with the MG-LEOPARD/900 multipurpose grid. The kit also allows 900-LFCs to be flown and groundstacked with LEOPARD with no transition hardware. The rigging kit is available as a factory-installed option or as a field upgrade and uses rugged GuideALinks and intuitive quick-release pins to securely link adjacent loudspeakers in flown and groundstacked array configurations.

NOTE: For more information on the MRK-900 rigging kit, including its kit contents, weight, and installation instructions, refer to the MG-LEOPARD/900 Assembly Guide (PN 05.243.080.01) available at www.meyersound.com.

900-LFC GUIDEALINKS

When equipped with the MRK-900 rigging kit, the 900-LFC includes six captive GuideALinks and six mating link slots that link to adjacent units in flown and groundstacked arrays. Located at the top of the cabinet, GuideALinks extend up and into the link slots of the cabinet above it, or into the link slots of the MG-LEOPARD/900 grid, making it easy to link cabinets once they are stacked. GuideALinks extend and retract with knobs and are secured with two quick-release pins: one each in the top and bottom cabinets. GuideALinks accommodate reversed units for cardioid arrays. The MRK-900 rigging kit includes eight 5/16 x 0.63-inch quick-release pins (black button) (PN 134.024).

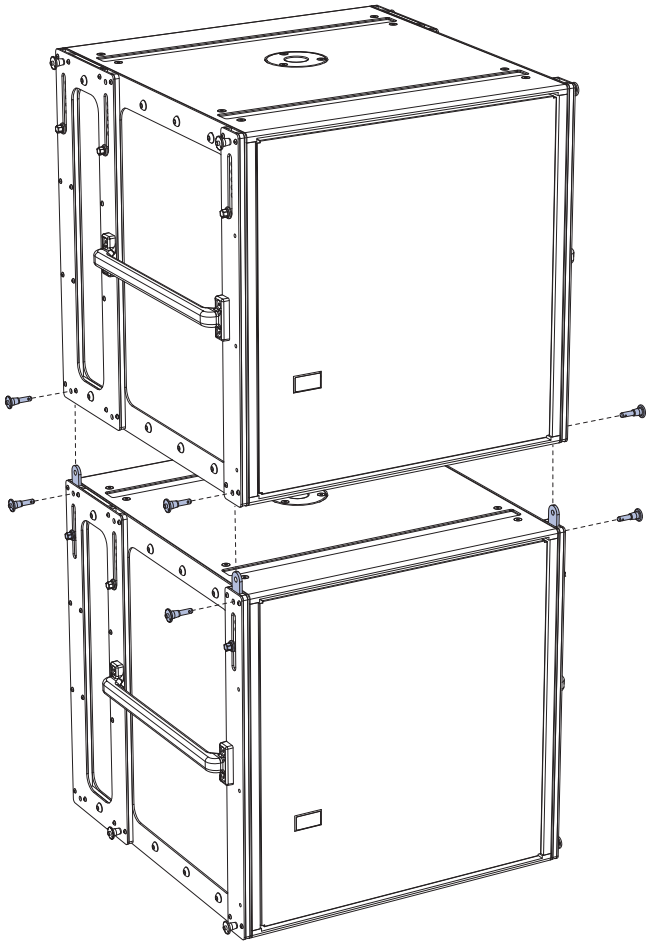

900-LFCs with MRK-900 Rigging Kit, GuideALinks, Exploded View

The 900-LFC's GuideALinks accommodate both 900-LFCs and LEOPARDs without transition hardware. The front and rear GuideALinks are used when flying the 900-LFC below the MG-LEOPARD/900 grid, or when flying it below another 900-LFC (see Figure 7). The configuration of the 900-LFC's GuideALinks, front and rear, determines its splay angle.

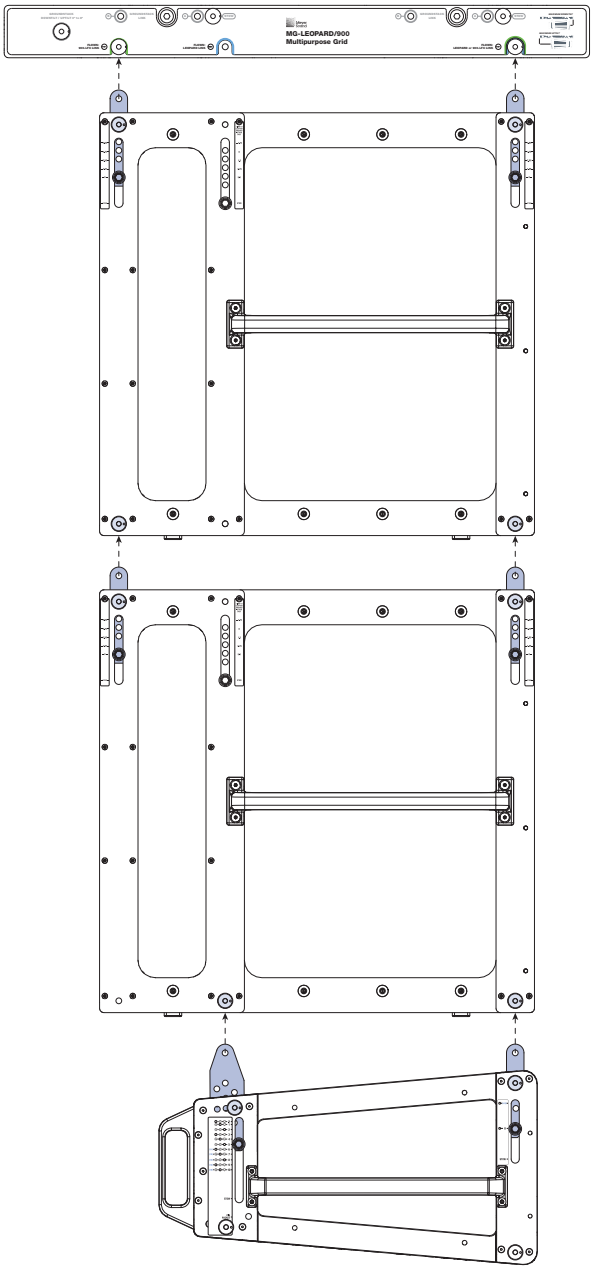

Figure 7: Flown 900-LFC with GuideALink Attachments

The 900-LFC's four corner link slots on the bottom of the cabinet accept GuideALinks from flown 900-LFCs. The front and rear/middle link slots accept LEOPARD GuideALinks when flying LEOPARDs below the 900-LFC (see Figure 7). The configuration of LEOPARD's GuideALinks, front and rear, determines its splay angle.

The 900-LFC's front and rear/middle link slots also accept links from the MG-LEOPARD/900 grid when groundstacking the 900-LFC (see Figure 8). The configuration of the grid's links, whether set to A or B, determines the angle of attachment for the groundstacked 900-LFC.

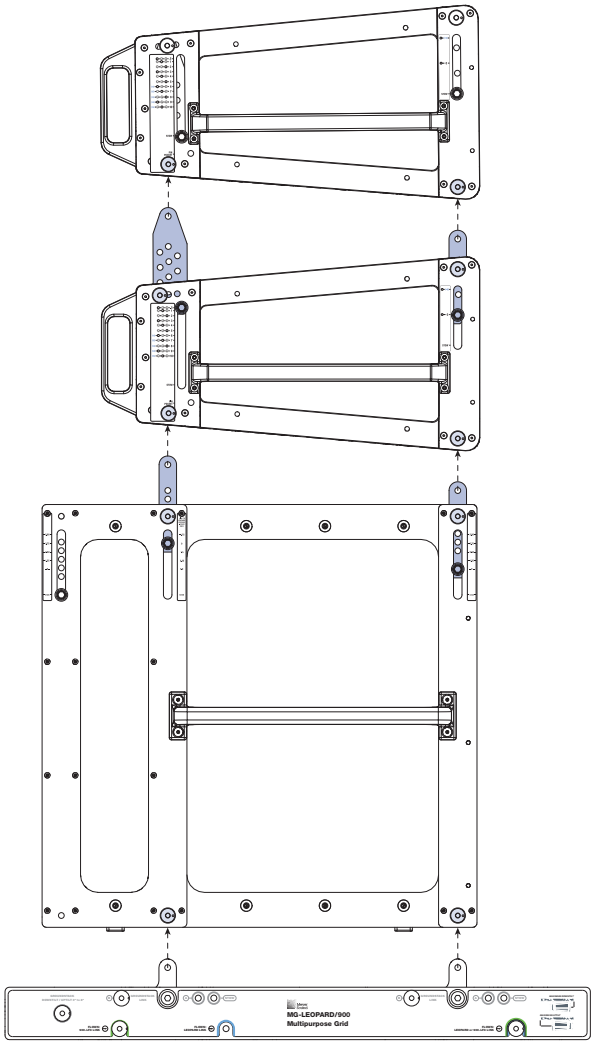

Figure 8: Groundstacked 900-LFC with GuideALink Attachments

The 900-LFC's front and rear/middle GuideALinks are used when attaching a LEOPARD groundstack on top of the 900-LFC (see Figure 8).

CAUTION: Do not use the rear/middle GuideALinks when flying the 900-LFC below the MG-LEOPARD/900 grid or when flying below another 900-LFC. Always use the front and rear GuideALinks when flying the 900-LFC.

NOTE: When flying the 900-LFC below the MG-LEOPARD/900 grid, a splay angle of 0 degrees is recommended for the top cabinet (rear

GuideALinks set to 0, front GuideALinks set to 0) to ensure that the cabinet aligns with any lasers or inclinometers mounted on the grid. To add tilt to the top cabinet, the actual grid should instead be tilted. For more information, see available at www.meyer-sound.com).

900-LFC Splay Angles

The front and rear GuideALinks attach at angles of 0.00, 1.25, 2.50, 3.75, or 5.00 degrees, thereby allowing curved arrays for the 900-LFC. Because the cabinet and front and rear GuideALinks are symmetrical, the curved arrays can also include cardioid configurations.

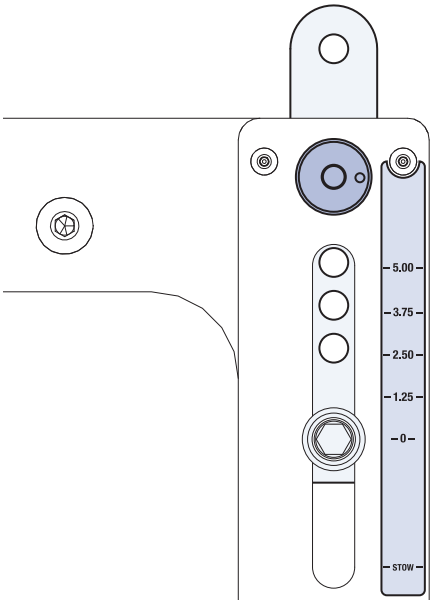

900-LFC Front GuideALinks Label

The labels next to the front and rear GuideALinks indicate the splay angle between cabinets (when the opposing links are set to 0 degrees). As the links are moved up, the splay angles increase. To stow the GuideALinks, move them all the way down to STOW and pin them.

NOTE: Curved 900-LFC arrays do not provide directionality for low-frequency content. The curved array capability of the 900-LFC is provided only for aesthetic reasons, to complement, if desired, the curvature of LEOPARD, LYON, and LEO-M arrays.

POLE-MOUNT RECEPTACLE

You can mount a Meyer Sound loudspeaker on top of the 900-LFC with a third-party heavy-duty pole and pole-mount adapter. The 900-LFC includes a 1.50-inch (U.S.) or 1.38-inch (E.U.) pole-mount receptacle.

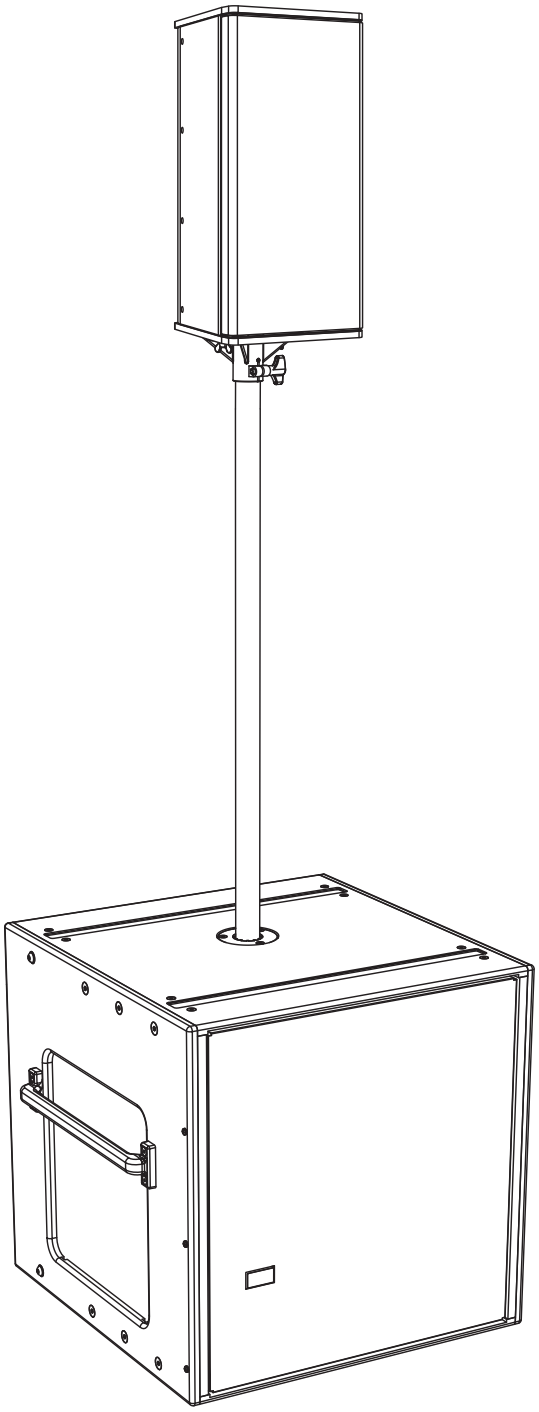

900-LFC with Pole and Pole-Mount Adapter

The following Meyer Sound loudspeakers can be mounted on top of the 900-LFC. Make sure that the pole and pole-mount adapter can support the weight of the mounted loudspeakers and that they are installed according to the manufacturer's instructions.

- (1) MINA with MUB-MINA U-bracket (47 lbs, 21.3 kg)
- (1) UPA-1P or UPA-2P (77 lbs, 34.9 kg)
- (1) UPJ-1P (46 lbs, 20.9 kg)
- (1) UPJunior (28 lbs, 12.7 kg)
- (2) UPJuniors with MUB-UPJunior U-bracket and MAAM-UPJunior array adapter (70 lbs, 31.8 kg)

CAUTION: Make sure the pole and pole-mount adapter can support the total weight of the mounted loudspeakers. In particular, heavier loudspeakers are less stable on taller pole mounts. Observe all safety precautions specified by the pole manufacturer.

CHAPTER 5: RMS REMOTE MONITORING SYSTEM

The 900-LFC includes an RMS remote monitoring system module, allowing the loudspeaker to be connected to an RMS network. RMS reports, in real time, the status and power usage of multiple Meyer Sound loudspeakers from a Mac or Windows-based computer. The RMS host computer communicates with Meyer Sound loudspeakers (equipped with RMS modules) via RMServer™, a compact, Ethernet-based hardware unit with two FT-10 ports. RMServer stores system configurations internally, eliminating most manual data entry. Systems can be monitored from a computer at front-of-house or backstage, or from a laptop anywhere within the venue over WiFi.

NOTE: For the latest RMS system requirements, visit the Meyer Sound website (http://www.meyersound.com).

NOTE: RMS does not control AC power.

COMPASS RMS SOFTWARE

Compass RMS™ software provides extensive system status and performance data for each loudspeaker, including amplifier voltage, limiting activity, power output, fan and driver status, as well as mute and solo capability. Loudspeakers are added to the RMS network and assigned a node name during a one-time discovery procedure. Once loudspeakers are identified on the RMS network, they appear in Compass RMS as icons that can be customized to suit your needs.

Compass RMS Window

Individual loudspeakers can be physically identified with the Wink option in RMS, which lights the Wink LED on the RMS module for that particular loudspeaker. Conversely, a loudspeaker can be identified in Compass RMS by pressing the Identify button on the loudspeaker's RMS module.

Loudspeaker icons can be arranged in Compass RMS and saved as pages to represent how the loudspeakers have been deployed in the system. Multiple pages can be saved and recalled for specific performances and venues.

RMS MODULE

The 900-LFC RMS user panel includes an Identify button, Remote Mute switch, Wink/Activity LED, and two Network connectors.

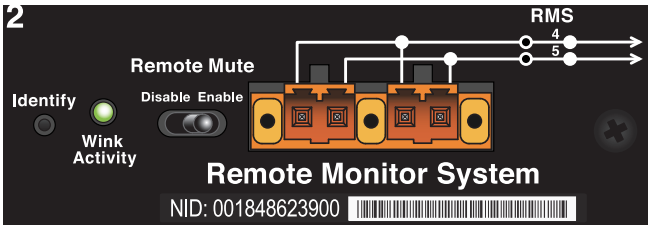

900-LFC RMS Module

NOTE: The Identify button and Wink/Activity LED on the RMS user panel are used exclusively by RMS and have no effect on the acoustical or electrical activity of the loudspeaker.

Identify Button

The Identify button serves the following functions:

- If the loudspeaker has not yet been discovered on the RMS network (Wink/Activity LED not lit), press the Identify button to discover it.
- To remove the loudspeaker from the RMS network, press and hold the Identify button during startup (see "Resetting the RMS Module" on page 28).
- To *wink* a discovered loudspeaker, press the Identify button. The Wink LED on the loudspeaker icon in Compass RMS lights up and the Wink/Activity LED on the loudspeaker's RMS user panel turns solid green. Press the Identify button again to unwink the loudspeaker.

TIP: The Wink function is useful for identifying the physical loudspeaker corresponding to a loudspeaker icon in Compass RMS.

TIP: The loudspeaker can also be winked by clicking the Wink button on the loudspeaker icon in Compass RMS.

Wink/Activity LED (Green)

The green Wink/Activity LED indicates the status of the loudspeaker:

- During startup, the LED flashes green 10 times.
- If the loudspeaker has not yet been discovered on the RMS network, the LED is not lit after startup.
- If the loudspeaker has been successfully discovered on the RMS network, the LED flashes green continuously and flashes more rapidly with increased data activity.
- When the loudspeaker is winked, either by clicking the Wink button in Compass RMS or by pressing the Identify button on the RMS user panel, the LED is solid green. The LED remains solid green until the loudspeaker is unwinked.

TIP: The Wink function is useful for identifying the physical loudspeaker corresponding to a loudspeaker icon in Compass RMS.

Remote Mute Switch

The recessed Remote Mute switch on the 900-LFC RMS module determines whether Compass RMS can control muting and soloing of the loudspeaker. The 900-LFC ships from the factory with the switch enabled.

Remote Mute Switch

- **Disable:** When the Remote Mute switch is set to Disable (to the left), the loudspeaker cannot be muted or soloed from Compass RMS.
- **Enable:** When the Remote Mute switch is set to Enable (to the right), the loudspeaker can be muted and soloed from Compass RMS.

NOTE: Compass RMS also allows you to disable Mute and Solo functions to eliminate any possibility of accidentally muting loudspeakers.

RMS Network Connectors

The Weidmuller 2-conductor, locking connectors transfer data to and from the RMS network. Two connectors are provided to allow for easy connection of multiple (daisy-chained) loudspeakers on the network. Included with each RMS-equipped loudspeaker are RMS cable connectors and mounting blocks for constructing RMS cables. The RMS blocks allow cables to be securely attached to the RMS module with screws.

NEURON ID FOR RMS MODULE

Each RMS module has a unique 12-character Neuron ID (NID) that identifies the loudspeaker on the network. The NID is automatically detected by RMServer but can also be entered manually, if necessary, when configuring RMS systems in Compass RMS without loudspeakers present. The NID label is located on the RMS user panel near the orange Network connectors.

RESETTING THE RMS MODULE

You can use the Identify button to reset the 900-LFC RMS module when powering on the loudspeaker. This will cause the module to be removed from the RMS network.

To reset the RMS module:

1. Power down the loudspeaker.
2. Press and hold the Identify button.
3. While continuing to hold down the Identify button, power on the loudspeaker.
4. After the Wink/Status LED flashes on and off, release the Identify button. The RMS module is reset and the loudspeaker is removed from the RMS network.

CHAPTER 6: SYSTEM DESIGN AND INTEGRATION TOOLS

This chapter introduces MAPP, Meyer Sound's patented system design tool, and SIM 3, a comprehensive system for measurement and analysis.

MAPP SYSTEM DESIGN TOOL

MAPP is a powerful, cross-platform application for accurately predicting the coverage pattern, frequency response, phase response, impulse response, and SPL capability of single or arrayed Meyer Sound loudspeakers.

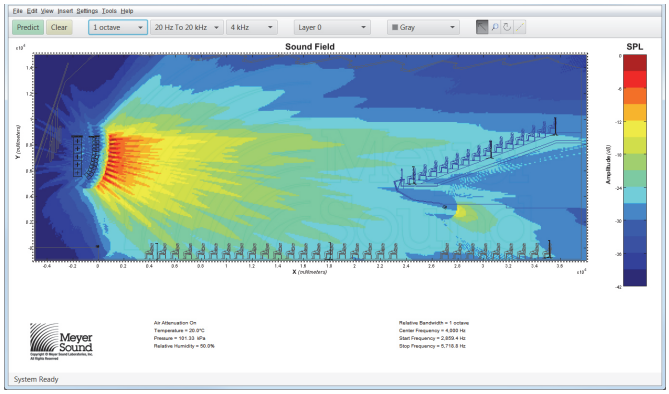

MAPP System Design Tool

Whether planning for fixed installations or for tours with multiple venues, you can use MAPP to accurately predict the appropriate loudspeaker deployment for each job, complete with coverage data, system delay and equalization settings, rigging information, and detailed design illustrations. MAPP's accurate, high-resolution predictions ensure that systems will perform as expected, thereby eliminating unexpected coverage problems and minimizing onsite adjustments.

The key to the accuracy of MAPP's predictions is Meyer Sound's exhaustive database of loudspeaker measurements. Performance predictions for each loudspeaker are based on 720 1/48th-octave-band measurements taken with a SIM audio analyzer in the Meyer Sound anechoic chamber. The extraordinary consistency between Meyer Sound loudspeakers guarantees that predictions from MAPP will closely match their actual performance.

MAPP client software lets you configure Meyer Sound loudspeaker systems and define the environment in which they operate, including air temperature, pressure, humidity, and even the location and composition of surfaces. You can also import CAD (.DXF) files containing detailed venue information to act as a visual aid.

MAPP prediction requests are sent by the client software to Meyer Sound servers, where complex, high-resolution (magnitude and phase) polar data is processed with sophisticated acoustical prediction algorithms. The resulting predictions are then displayed in the MAPP client software.

TIP: Meyer Sound offers seminars and webinars on using MAPP. For more information, visit www.meyersound.com.

MAPP Capabilities

With MAPP, you can:

- Simulate different loudspeaker configurations to refine system design and determine the best coverage for intended audience areas
- Monitor loudspeaker interactions to locate constructive and destructive interferences so that loudspeakers can be re-aimed and repositioned as necessary
- Place microphones anywhere in the sound field and predict loudspeaker frequency response, phase response, and sound pressure levels as measured at each microphone position
- Determine delay settings for fill loudspeakers using the Inverse Fast Fourier Transform feature
- Preview the results of Galileo or Galileo Callisto processing to determine optimum settings for the best system response
- Automatically calculate load information for arrays to determine rigging capacity, front-to-back weight distribution, and center of gravity location
- Generate and export system images and full-system PDF reports for client presentations

SIM 3 MEASUREMENT SYSTEM

The SIM 3 audio analyzer is a high-resolution audio measurement system comprised of software, hardware, microphones, and accessory cables. SIM 3 is optimized for measuring audio frequencies with resolutions down to 1/48th of an octave, allowing you to apply precise corrections to balance system response using frequency and phase domain information.

Source Independent Measurement Technique

The SIM 3 audio analyzer implements Meyer Sound's source independent measurement technique, a dual-channel method that accommodates statistically unpredictable excitation signals. Any excitation signal within a desired frequency range can be used to obtain highly accurate measurements for acoustical or electronic systems.

For example, during a performance, both the input signal and the measured output of the loudspeaker system can be captured and used as a SIM 3 test signal, so you can:

- View measurement data as amplitude versus time (impulse response) or amplitude and phase versus frequency (frequency response)
- Utilize a single-channel spectrum mode
- View frequency domain data with a logarithmic frequency axis
- Determine and internally compensate for propagation delays using the SIM 3 Delay Finder

SIM 3 Applications

SIM 3's main applications are testing and aligning loudspeaker systems, which entails:

- Measuring propagation delays between subsystems to determine appropriate polarities and delay times
- Measuring variations in frequency response caused by the acoustical environment and the placement and interaction of loudspeakers to determine corrective equalization
- Optimizing subwoofer integrations
- Optimizing loudspeaker arrays

SIM 3 can also be used in the following applications:

- Microphone calibration and equalization
- Transducer evaluation and correction
- Echo detection and analysis
- Vibration analysis
- Architectural acoustics

APPENDIX A: RAIN HOODS

Weather-protected 900-LFCs include a quick-clip removable rain hood for indoor/outdoor touring and sheltered outdoor installations.

900-LFC QUICK-CLIP RAIN HOOD

The 900-LFC quick-clip removable rain hood is easily attached and removed with its two winghead studs.

To attach the 900-LFC quick-clip rain hood:

1. Attach any required cables to the 900-LFC loudspeaker.
2. Attach the rain hood to the user panel, slipping it under the rain hood retainer's flange at the top of the user panel and securing it to the center of the panel with its two winghead studs.

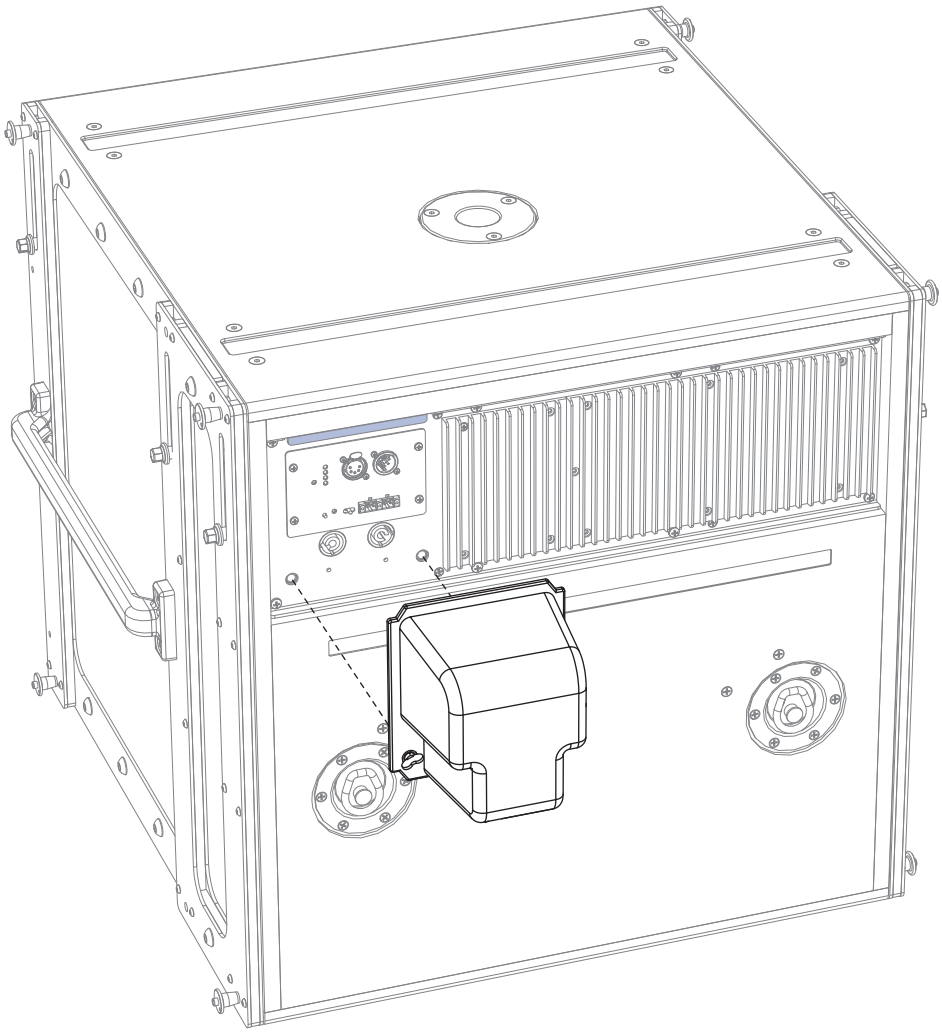

900-LFC with Quick-Clip Rain Hood

3. Make sure to tighten the winghead studs one quarter turn so they fully lock.

APPENDIX B: SPECIFICATIONS

NOTE: Loudspeaker system predictions for coverage and SPL are available in Meyer Sound's MAPP prediction software.

900-LFC Specifications

ACOUSTICAL	
Operating Frequency Range	31 Hz – 125 Hz **Note:** Recommended maximum operating frequency range. Response depends on loading conditions and room acoustics.
Phase Response	40 Hz – 110 Hz ±30 degrees
TRANSDUCERS	
Low Frequency	One 18-inch dual-coil, long-excursion cone driver
AUDIO INPUT	
Type	Differential, electronically balanced
Maximum Common Mode Range	±15 V DC, clamped to earth for voltage transient protection
Connectors	XLR 3-pin or 5-pin female input XLR 3-pin or 5-pin male loop output **Note:** XLR 5-pin connectors accommodate both balanced audio and RMS signals.
Input Impedance	10 kOhm differential between pins 2 and 3
Wiring	Pin 1: Chassis/earth through 1 kOhm, 1000 pF, 15 V clamped network to provide virtual ground lift at audio frequencies Pin 2: Signal (+) Pin 3: Signal (–) Pin 4: RMS (polarity insensitive) Pin 5: RMS (polarity insensitive) Case: Earth ground and chassis **Note:** Pins 4 and 5 (RMS) included only with XLR 5-pin connectors.
DC Blocking	Differential DC blocking up to the maximum common mode voltage
CMRR	>50 dB, typically 80 dB (50 Hz – 500 Hz)
RF Filter	Common mode: 425 kHz Differential mode: 142 kHz
TIM Filter	Integral to signal processing (<80 kHz)
Nominal Input Sensitivity	6.0 dBV (2.0 V rms) continuous is typically the onset of limiting for noise and music
Input Level	Audio source must be capable of producing +20 dBV (10 V rms, 14 V peak) into 600 ohms to produce the maximum peak SPL over the operating bandwidth of the loudspeaker
AMPLIFIER	
Type	2-channel, open-loop, class D
Cooling	Convection
AC POWER	
Connectors	powerCON 20 input with loop output
Safety Rated Voltage Range	100–240 V AC, 50–60 Hz
Turn-on/off Points	Turn-on: 90 V AC; Turn-off: none; internal fuse protection above 265 V AC

900-LFC Specifications

Current Draw			
Idle	0.60 A rms (115 V AC)	0.49 A rms (230 V AC)	0.63 A rms (100 V AC)
Maximum Long-Term Continuous	4.9 A rms (115 V AC)	2.5 A rms (230 V AC)	5.2 A rms (100 V AC)
Burst	8.8 A rms (115 V AC)	4.7 A rms (230 V AC)	11.0 A rms (100 V AC)
Maximum Instantaneous Peak	18.2 A peak (115 V AC)	9.2 A peak (230 V AC)	20.6 A peak (100 V AC)
PHYSICAL			
Enclosure	Multi-ply hardwood		
Finish	Black textured		
Protective Grille	Hex-stamped steel with acoustical black mesh		
Rigging	Optional MRK-900 rigging kit with endframes and captive GuideALinks (0.0 to 5.0-degree splay angles), quick-release pins, and detachable side handles		
Load Ratings	MG-LEOPARD/900 multipurpose grid flies 17 900-LFCs at a 5:1 safety factor, or 12 900-LFCs at a 7:1 safety factor, with some restrictions		
Dimensions	27.43 inches (697 mm) W	24.43 inches (621 mm) H	24.89 inches (632 mm) D
Dimensions (w/Rigging)	27.47 inches (698 mm) W	24.43 inches (621 mm) H	24.89 inches (632 mm) D
Weight	136 lbs (61.7 kg)		
Weight (w/Rigging)	159 lbs (72.1 kg)		
ENVIRONMENTAL			
Operating Temperature	0° C to +45° C		
Non Operating Temperature	–40° C to +75° C		
Humidity	To 95% at 45° C (non-condensing)		
Operating Altitude	To 5,000 m (16,404 ft)		
Non Operating Altitude	To 12,000 m (39,000 ft)		
Shock	30 g 11 msec half-sine on each of 6 sides		
Vibration	10 Hz – 55 Hz (0.010 m peak-to-peak excursion)		

900-LFC DIMENSIONS

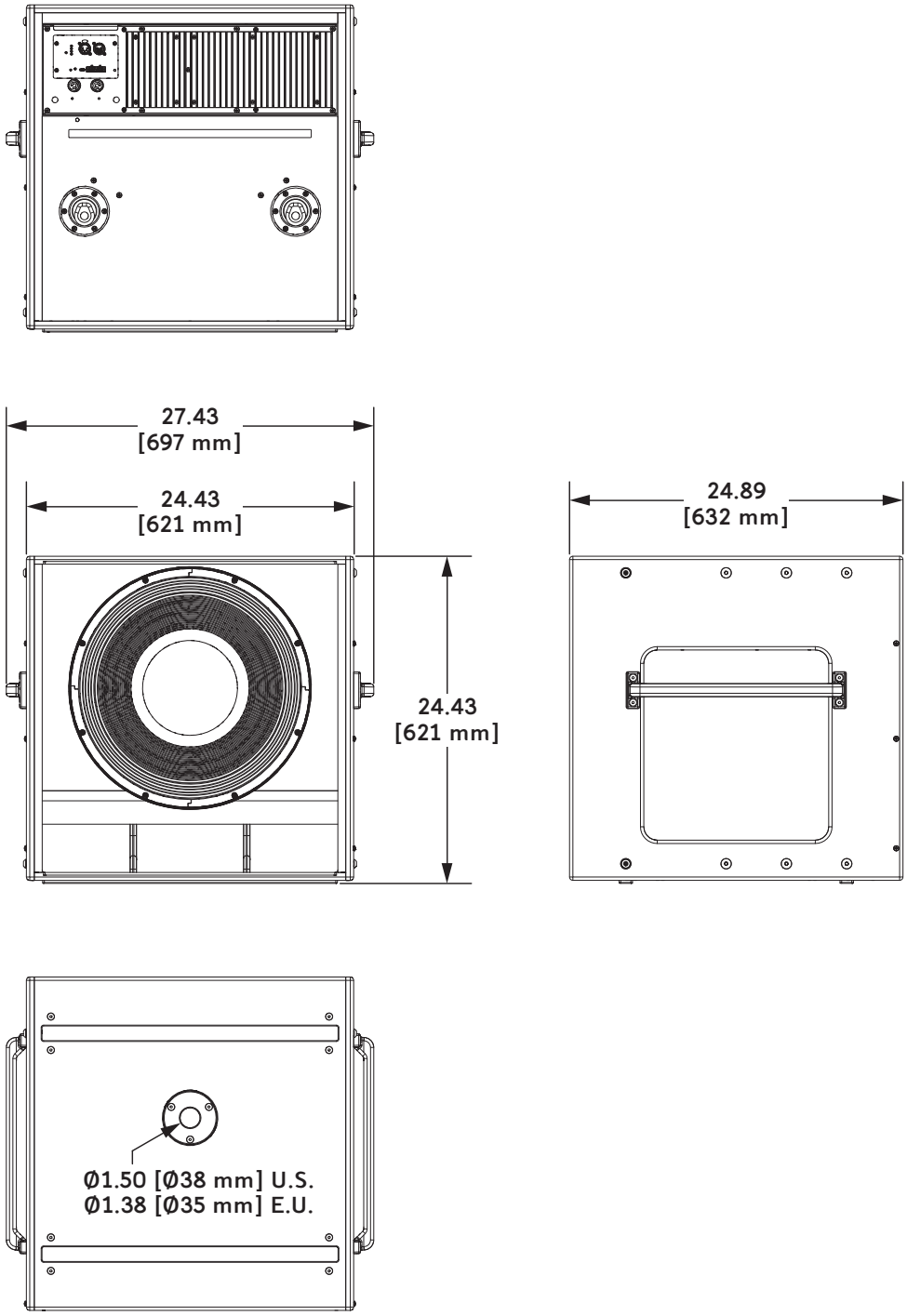

900-LFC Dimensions

NOTE: For dimensions and weight for the MG-LEOPARD top grid and MCF-900 caster frame, refer to the MG-LEOPARD/900 Assembly Guide (PN 05.243.080.01) available at www.meyersound.com.

900-LFC with Rigging Dimensions

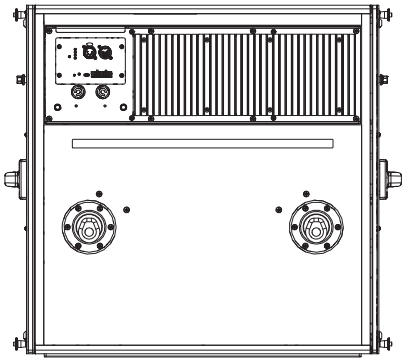

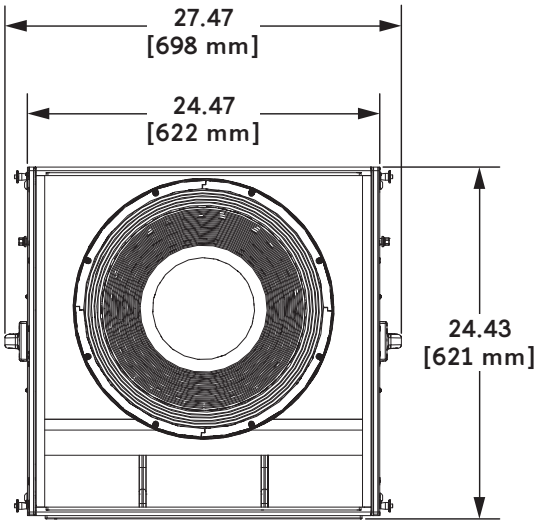

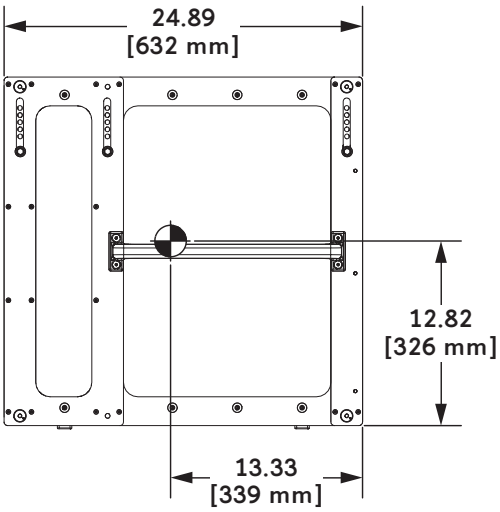

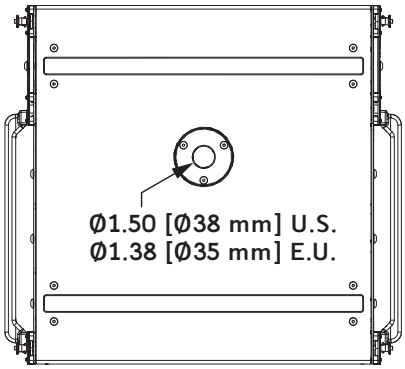

900-LFC with Rigging Dimensions

FEDERAL COMMUNICATIONS COMMISSION (FCC) STATEMENT

This equipment has been tested and found to comply with the limits for a Class A digital device, pursuant to part 15 of the FCC Rules. These limits are designed to provide reasonable protection against harmful interference when the equipment is operated in a commercial environment. This equipment generates, uses, and can radiate radio frequency energy and, if not installed and used in accordance with the instruction manual, may cause harmful interference to radio communications. Operation of this equipment in a residential area is likely to cause harmful interference in which case the user will be required to correct the interference at their own expense.

This device complies with Part 15 of the FCC rules. Operation is subject to the following two conditions: (1) this device may not cause harmful interference, and (2) this device must accept any interference received, including interference that may cause undesired operation.

INDUSTRY CANADA COMPLIANCE STATEMENT

This Class A digital apparatus complies with Canadian ICES-003.

AVIS DE CONFORMITÉ À LA RÉGLEMENTATION D'INDUSTRIE CANADA

Cet appareil numérique de la classe A est conforme à la norme NMB-003 du Canada.

EN 55032 (CISPR 32) STATEMENT

Warning: This equipment is compliant with Class A of CISPR 32. In a residential environment this equipment may cause radio interference.

Meyer Sound Laboratories Inc.
2832 San Pablo Avenue
Berkeley, CA 94702
+1 510 486.1166
www.meyersound.com

900-LFC Operating Instructions
PN 05.246.005.01 B3